# Inductive proximity switch  4669400

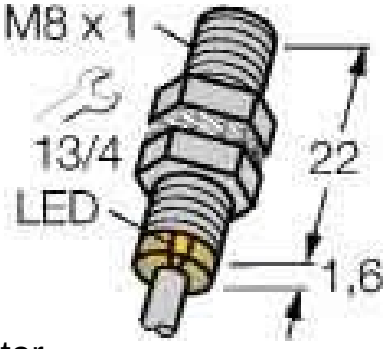


## Allgemeine Informationen

| | |
|---|---|
| Products_Model | ET6305133 |
| EAN | 4047101158960 |
| Producer | Turck |
| Producer-Model | 4669400 |
| Producer-Typ | Bi2-EG08K-AP6X |
| min. Order | |
| Class | Induktiver Näherungsschalter |

## Technische Informationen

Inductive proximity switch  4669400 online kaufen